MAKING MODERN LIVING POSSIBLE

Operating Instructions

VLT® PTC Thermistor Card MCB 112

VLT® HVAC Drive FC 102 • VLT® AQUA Drive FC 202
VLT® AutomationDrive FC 302

vlt-drives.danfoss.com

THE REAL DRIVE

Contents

1 Introduction 3
1.1 Purpose of the Manual 3
1.2 Additional Resources 3
1.3 Document and Software Version 3
1.4 Products Covered 3
1.5 Functional Overview 3
1.5.1 Intended Use 3
1.5.2 Foreseeable Misuse 4
1.5.3 Thermal Motor Protection 4
1.5.4 ATEX ETR Thermal Monitoring 4
1.5.5 Tripping Function 4
1.5.6 Safe Separation 4
1.5.7 Safe Disconnection Principle 4
1.6 Motor Requirements 5
1.6.1 Motor Limits and Rules 5
1.6.2 Additional Motor Requirements 5
1.7 Approvals and Certifications 5
1.8 Symbols, Abbreviations, and Conventions 6

2 Safety 7
2.1 Safety Symbols 7
2.2 Qualified Personnel 7
2.3 Safety Precautions 7

3 Installation 9
3.1 Safety Instructions 9
3.2 Installation of Sensor Circuit Wires 9
3.3 Installation of the VLT® PTC Thermistor Card MCB 112 10

4 Commissioning 12
4.1 Operation and Maintenance 12
4.1.1 Monitoring Sensor Resistance 12
4.2 Parameter Set-up 13
4.2.1 Alarm Handling 13
4.3 Parameter Set-up for Ex-e and Ex-n Motors 14
4.3.1 Maximum Current 14
4.3.2 Maximum Current Limit 14
4.3.3 Minimum Motor Frequency 14
4.3.4 Maximum Motor Frequency 15
4.3.5 Minimum Switching Frequency 15

 Danfoss A/S © 01/2015 All rights reserved.

4.3.6 Disable Protection Mode 15
4.3.7 Safe Torque Off Functionality 15

5 Application Examples 17

6 Maintenance and Troubleshooting 19
6.1 Maintenance 19
6.2 Troubleshooting 19
6.2.1 Alarm/Warning Code List 19
6.2.2 Description of Alarm Word, Warning Word, and Extended Status Word 19

7 Technical Specifications 21
7.1 Mains Supply 21
7.2 Control Inputs and Outputs 21
7.3 Ambient Conditions 21
7.4 Other Specifications 22
7.5 Safety Characteristics of the Built-in MCB 112 22

Index 23

 Danfoss A/S © 01/2015 All rights reserved.

1 Introduction

1.1 Purpose of the Manual

This manual provides information for safe installation and commissioning of VLT® PTC Thermistor Card MCB 112 used with a Danfoss VLT® frequency converter with Safe Torque Off (STO). The manual is intended for use by qualified personnel only.

VLT® PTC Thermistor Card MCB 112 is also referred to as MS 220 DA.

The operating instructions are intended for use by qualified personnel. Read and follow the operating instructions to use the frequency converter safely and professionally, and pay particular attention to the safety instructions and general warnings. Keep these operating instructions available with the frequency converter at all times.

VLT® is a registered trademark.

1.2 Additional Resources

This manual is targeted at users already familiar with the VLT® frequency converters. It is intended as a supplement to the manuals and instructions available for download at *vlt-drives.danfoss.com/Support/Technical-Documentation/*. Read the instructions shipped with the frequency converter and/or frequency converter option before installing the unit, and observe the instructions for safe installation.

1.3 Document and Software Version

This manual is regularly reviewed and updated. All suggestions for improvement are welcome. Please send suggestions via email to techcom_change_request@danfoss.com, including a reference to the document version. *Table 1.1* shows the document version and the changes applied.

Edition	Remarks
MG33V3xx	Replaces MG33V2xx. Editorial changes. Now covering the complete system.

Table 1.1 Document Version

1.4 Products Covered

The VLT® PTC Thermistor Card MCB 112 is available for the following types of frequency converters:

- VLT® HVAC Drive FC 102.
- VLT® AQUA Drive FC 202.
- VLT® AutomationDrive FC 302.

1.5 Functional Overview

1.5.1 Intended Use

The VLT® PTC Thermistor Card MCB 112 is intended to:

- Protect electrical motors against inadmissible heating due to overload.
- Protect explosion-protected motors in explosive atmospheres caused by gases, vapours, or mists, Zone 1 and Zone 2, and/or in explosive atmospheres caused by dust, Zone 21 and Zone 22. Refer to marking G for Zone 1 and Zone 2. Refer to marking D for Zone 21 and Zone 22.

All functions in the MCB 112 serve to protect both non-explosive-protected motors and explosive-protected motors in regular operation and in case of failure.

The VLT® PTC Thermistor Card MCB 112 is designed in accordance with EN 60947-8 (VDE 0660 part 0302). Only connect PTC thermistor sensors according to DIN 44081 and 44082 (EN 60947-8).

NOTICE

The VLT® PTC Thermistor Card MCB 112 is only functional if it is built into the frequency converter. The option cannot be used as a stand-alone.

 Danfoss A/S © 01/2015 All rights reserved.

1

1.5.1.1 Markings of the Frequency Converter

A sticker is delivered with the option as spare part or with the frequency converter to signify ATEX certification. Apply this sticker to the front of the frequency converter in which the ATEX module is integrated. The sticker indicates that the ATEX module is installed in the frequency converter.

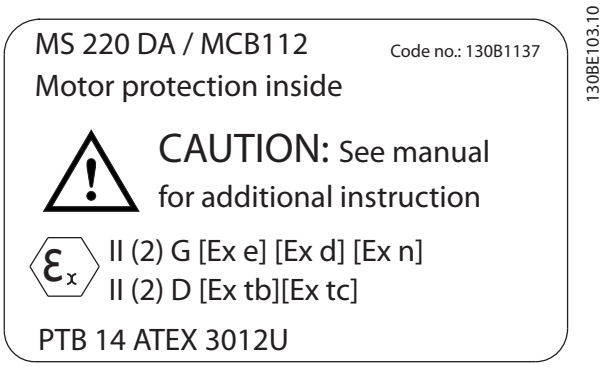

Illustration 1.1 Label to Apply to Frequency Converter

1.5.2 Foreseeable Misuse

Any use not expressly approved by Danfoss constitutes misuse. This also applies to failure to comply with the specified operating conditions and applications.

Danfoss assumes no liability of any sort for damage attributable to improper use.

Only operate with explosion-protected 3-phase motors which are built, tested and labelled separately for frequency converter use.

⚠WARNING

EXPLOSION DANGER

Zone 0 and Zone 20 are not applicable to electric motors.

To avoid explosion, only use motors in:

- **Zone 1/21.**
- **Zone 2/22.**

1.5.3 Thermal Motor Protection

According to ATEX Directive 94/9/EC and Standard EN 60079-14, motor overload protection is a requirement. The MCB 112 monitors the temperature in the motor windings with an ATEX-approved motor overload protection device. If there is a critical temperature level or a malfunction, switch off the motor. If the frequency converter is equipped with 3–6 PTC thermistors in series according to DIN 44081 or 44082, the MCB 112 offers ATEX-approved monitoring of the motor temperature. Alternatively, an external ATEX-approved PTC protection device can be used.

1.5.4 ATEX ETR Thermal Monitoring

NOTICE

The ATEX ETR thermal monitoring function only applies to Ex-e and Ex-n motors and is only available for VLT® AutomationDrive FC 302 frequency converters.

The FC 302 with firmware version V6.3x or higher is equipped with an ATEX ETR thermal monitoring function for operation of Ex-e motors according to EN 60079-7 and Ex-n motors according to EN 60079-15. Combined with an ATEX-approved PTC monitoring device like MCB 112, the installation does not need an individual approval from an approbated organisation, that there is no need for matched pairs.

The feature makes it easier to apply Ex-e and Ex-n motors instead of the more expensive, larger, and heavier Ex-d motors. The use of Ex-e and Ex-n motors is possible by ensuring that the frequency converter limits the motor current to prevent the motor from heating up.

1.5.5 Tripping Function

The MCB 112 includes a tripping stage for PTC thermistor sensors with safe potential separation of supply voltage from ground. The tripping function switches off the +24 V DC directly at terminal 37 on the frequency converter.

The PNP logic output terminal X44/10 signals the status in case of failure. The MCB 112 works according to the closed-circuit principle. The device trips in case of short circuit or line interruption.

1.5.6 Safe Separation

The PTC thermistor circuit (T1, T2) has a safe separation of low-voltage electric circuits PELV, see *chapter 3.2 Installation of Sensor Circuit Wires*.

1.5.7 Safe Disconnection Principle

The Safe Torque Off function disables the control voltage of the power semiconductors or the frequency converter output stage. Disabling the control voltage prevents the inverter from generating the voltage required to rotate the motor.

 Danfoss A/S © 01/2015 All rights reserved.

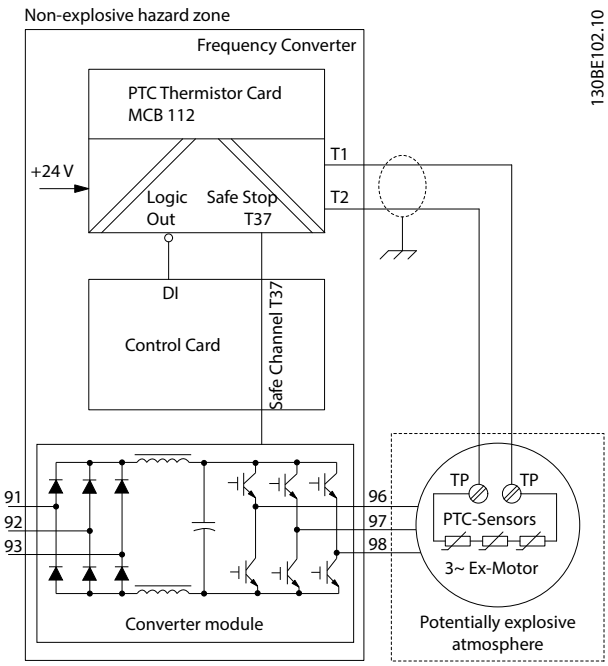

Illustration 1.2 Block Diagram of the System

1.6 Motor Requirements

1.6.1 Motor Limits and Rules

For every certified motor with increased safety, the manufacturer supplies a data list including limits and rules. During planning, installation, commissioning, operation, and service, respect the limits for:

- Minimum switching frequency.
- Maximum current.
- Minimum motor frequency.
- Maximum motor frequency.

Furthermore, respect the following:

- Do not exceed the maximum allowable ratio between frequency converter size and motor size. The typical value is $I_{VLT,\,n} \leq 2 x I_{m,n}$.
- Consider all voltage drops from the frequency converter to the motor. If the motor is running with lower voltage than listed in the U/f characteristics, current might increase and cause an alarm.
- Multi-motor applications are not allowed. Only connect 1 motor to the frequency converter.

1.6.2 Additional Motor Requirements

The Ex-e motor must be approved for operation in hazardous zones (ATEX Zone 1/21, ATEX Zone 2/22) in combination with frequency converters. The motor must be certified for the particular hazardous zone.

The Ex-n motor must be approved for operation in hazardous zones (ATEX Zone 2/22) in combination with frequency conveters. The motor must be certified for the particular harzardous zone.

NOTICE

The motor can be placed in Zone 1/21 or 2/22 according to motor approval. The frequency converter must always be installed outside of the hazardous zone.

- Only operate explosion-protected 3-phase motors with frequency converters, if the motors are built, tested, approved, and labelled separately for this mode.
- When the usage of the motor and its thermal protective device are approved for frequency converter operation, use the MCB 112 for each ignition protection system for all motor types. For motors of Ex-e and Ex-n-type ignition protection, which are OEM-approved for frequency converter operation in Ex-harzardous areas, consider and use the requested limitations in the frequency converter's ATEX ETR thermal monitoring settings.
- The necessary parameters and conditions can be found on the nameplate or the documentation of the motor. To prevent prohibited temperatures, the motors are equipped as standard with thermal winding protection, which has to be evaluated by a suitable device like MCB 112. The motors must not be operated as a group drive.

1.7 Approvals and Certifications

Certification number:
PTB 14 ATEX 3012U

Certificates and declarations of conformity are available. Contact a local Danfoss partner.

 Danfoss A/S © 01/2015 All rights reserved.

1

1.8 Symbols, Abbreviations, and Conventions

Abbreviation	Description
ETR	Electronic thermal relay.
LCP	Local control panel.
NC	Not connected.
PNP	Positive negative positive (transistor).
TNF	Nominal response temperature.

Table 1.2 Abbreviations

Abbreviation	Reference	Description
ATEX	ATEX Directive 94/9/EC	ATmosphere EXplosibles
HFT	EN IEC 61508	Hardware fault tolerance: HFT=n means that n+1 faults could cause a loss of the safety function.
PDS/SR	EN IEC 61800-5-2	Power drive system (safety-related).
PFD	EN IEC 61508	Average probability of failure on demand, value used for low-demand operation.
SFF	EN IEC 61508	Safe failure fraction [%]; percentage of safe failures and dangerous detected failures of a safety function or a subsystem related to all failures.
SIL	EN IEC 61508 EN IEC 62061	Safety integrity level.
STO	EN IEC 61800-5-2	Safe Torque Off.
SRECS	EN IEC 62061	Safety-related electrical control system.

Table 1.3 Abbreviations Related to Functional Safety

Conventions

Numbered lists indicate procedures.

Bullet lists indicate other information and description of illustrations.

Italicised text indicates:

- Cross-reference.
- Link.
- Parameter name.

 Danfoss A/S © 01/2015 All rights reserved.

2 Safety

2.1 Safety Symbols

The following symbols are used in this manual:

⚠WARNING

Indicates a potentially hazardous situation that could result in death or serious injury.

⚠CAUTION

Indicates a potentially hazardous situation that could result in minor or moderate injury. It can also be used to alert against unsafe practices.

NOTICE

Indicates important information, including situations that can result in damage to equipment or property.

2.2 Qualified Personnel

The products must only be assembled, installed, programmed, commissioned, maintained, and decommissioned by persons with proven skills. Persons with proven skills:

- Are qualified electrical engineers, or persons who have received training from qualified electrical engineers and are suitably experienced to operate devices, systems, plant, and machinery in accordance with the general standards and guidelines for safety technology.
- Are familiar with the basic regulations concerning health and safety/accident prevention.
- Have read and understood the safety guidelines given in this manual and also the instructions given in the operating instructions of the frequency converter.
- Have a good knowledge of the generic and specialist standards applicable to the specific application.

Users of PDS(SR) are responsible for:

- Hazard and risk analysis of the application. In EN ISO 12100, risk assessment is defined as an overall process comprising a risk analysis and a risk evaluation.
- Ensuring that the qualified personnel has experience with working in ATEX areas according to Directive 99/92/EC (also known as the *ATEX Workplace Directive*).
- Identifying safety functions required, and allocating SIL to each of the functions.
- Other subsystems and the validity of signals and commands from those subsystems.
- Designing appropriate safety-related control systems (hardware, software, parameterisation, and so on).

Protective measures

- Safety engineering systems must only be installed and commissioned by qualified and skilled personnel.
- Install the frequency converter in an IP54 cabinet as per IEC 60529, or in an equivalent environment. In special applications, a higher IP degree may be necessary.
- Ensure short-circuit protection of the cable between terminal 37 and the external safety device according to ISO 13849-2 table D.4.
- When external forces influence the motor axis (for example suspended loads), additional measures (for example a safety holding brake) are required to eliminate hazards.

2.3 Safety Precautions

⚠WARNING

EXPLOSION HAZARD

Using the VLT® PTC Thermistor Card MCB 112 in areas with explosive gas and/or dust atmosphere may lead to death, personal injury, or property damage. To avoid the risk, adhere to the following:

- **Always provide the MCB 112 with a pressurised enclosure according to EN 60079-1 (Explosive atmospheres - Part 1: Equipment protection by flameproof enclosures "d").**
- **Observe national safety rules and regulations for prevention of accidents, as well as the European Standard EN 60079-14 (Explosive atmospheres - Part 14: Electrical installations design, selection, and erection).**
- **Only qualified personnel (see *chapter 2.2 Qualified Personnel*) is allowed to install, connect, and commission the MCB 112.**
- **Ensure that the motor thermal protection switches off the motor directly, via the STO function, or by using the ATEX ETR thermal monitoring function.**

 Danfoss A/S © 01/2015 All rights reserved.

2

⚠WARNING

FIRE HAZARD

Using the VLT® PTC Thermistor Card MCB 112 in areas with combustible dust may lead to death, personal injury, or property damage. To avoid the risk, adhere to the following:

- **Always provide the MCB 112 with a dust-proof enclosure according to IEC 60529.**
- **Observe national safety rules and regulations for prevention of accidents, as well as the European Standard EN 60079-14 (Explosive atmospheres - Part 14: Electrical installations, design, selection, and erection).**
- **Only qualified personnel (see *chapter 2.2 Qualified Personnel*) is allowed to install, connect, and commission the MCB 112.**

⚠WARNING

UNINTENDED START

When the frequency converter is connected to AC mains, the motor may start at any time, causing risk of death, serious injury, equipment, or property damage. The motor can start by means of an external switch, a serial bus command, an input reference signal from the LCP, after a cleared fault condition, or after the motor and motor thermistors have cooled down.

- **Disconnect the frequency converter from mains whenever personal safety considerations make it necessary to avoid unintended motor start.**
- **Press [Off] on the LCP, before programming parameters.**
- **The frequency converter, motor, and any driven equipment must be in operational readiness when the frequency converter is connected to AC mains.**

⚠CAUTION

RISK OF INJURY AND EQUIPMENT DAMAGE

Read and observe these operating instructions and safety warnings before installing the VLT® PTC Thermistor Card MCB 112. Not adhering to the instructions and warnings in this manual may lead to personal injury, and property and equipment damage.

 Danfoss A/S © 01/2015 All rights reserved.

3 Installation

3.1 Safety Instructions

⚠CAUTION

The operator or electrical installer is responsible for proper grounding and compliance with all applicable national and local safety regulations.

See *chapter 2 Safety* and the relevant frequency converter operating instructions. Also, always observe the instructions provided by the motor manufacturer.

3.2 Installation of Sensor Circuit Wires

NOTICE

The connections are not pre-wired from the factory.

⚠WARNING

NO SAFE FUNCTION

Using sensor wires with a resistance >20 Ω causes the safe function not to work.
To ensure a properly working safe function, only use sensor circuit wires with a resistance <20 Ω.

Sensor circuit wire connection

Wire cross-section [mm^2]	Wire length [m]
1.5	2 x 800
1	2 x 500
0.75	2 x 300
0.5	2 x 250

Table 3.1 Maximum Permissible Length of Sensor Circuit Wires

NOTICE

Route the sensor circuit wires as separate control wires. It is not allowed to use wires from the supply cable or any other mains cables. Use screened control wires. See *Illustration 3.2* for correct wiring.

1. Select appropriate sensor wires.
2. Route the sensor wires.
3. Remove the screening in the area of the screening clamps and press the wires into the clamps.

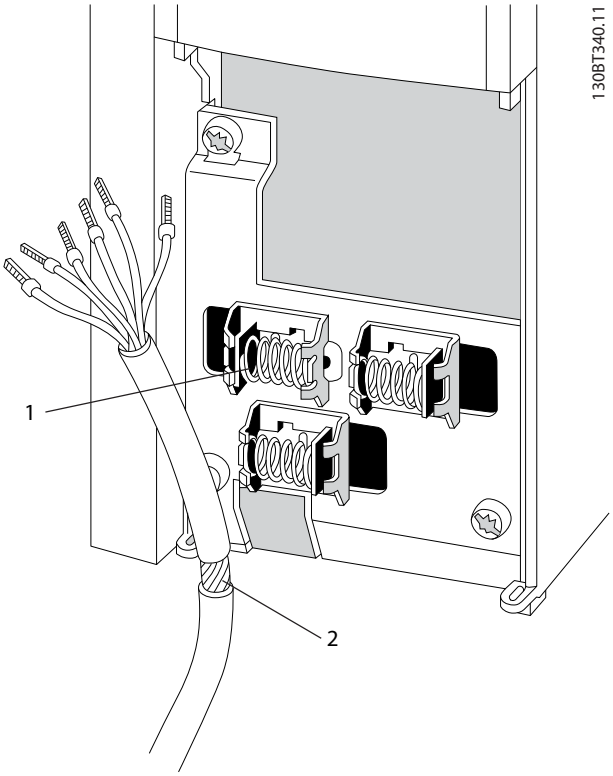

1	Screening clamps
2	Removed screening

Illustration 3.1 Connecting Screened Wire

4. Measure the sensor resistance.
5. Connect the sensor circuit wires to X44/T1 and T2. See *Illustration 3.2*.

NOTICE

Only check PTCs with measuring voltages of <2.5 V.

At commissioning and after modification of the plant, check the sensor resistance with a suitable measuring instrument. If the resistance between terminals 1 and 2 is <50 Ω, examine the sensor circuit for a short circuit.

 Danfoss A/S © 01/2015 All rights reserved.

3

Maximum current on MCB 112

- Terminal 10: 10 mA.
- Terminal 12: 60 mA.

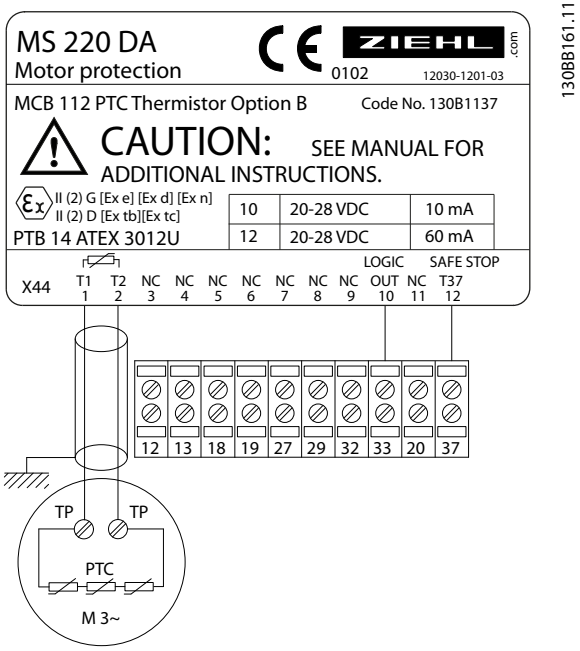

Illustration 3.2 Wiring Diagram

3.3 Installation of the VLT® PTC Thermistor Card MCB 112

For motor connection, AC mains connection, and control wiring, follow the instructions for safe installation in the operating instructions of the frequency converter and the *VLT® Frequency Converter - Safe Torque Off Operating Instructions*.

Terminal	Description.
Terminal 12	24 V DC supply voltage.
Terminal 13	24 V DC supply voltage.
T37 (X44/12)	Output terminal on the MCB 112 option.
Terminal 37	Input terminal on the control card.
X44/10	Logic output signals the status in case of failure.

Table 3.2 Terminal Definitions

⚠CAUTION

RISK OF OVERVOLTAGE

Long cables (voltage peaks) or increased mains voltage may lead to overvoltage at the motor terminals and damage the equipment.

- **Install a sine-wave filter.**

⚠CAUTION

Place the frequency converter with MCB 112 (including the connection between output safe stop T37 output (X44/12) on MCB 112 and terminal 37 input on the control card) in an IP54 enclosure as per IEC 60529.

Installing the MCB 112

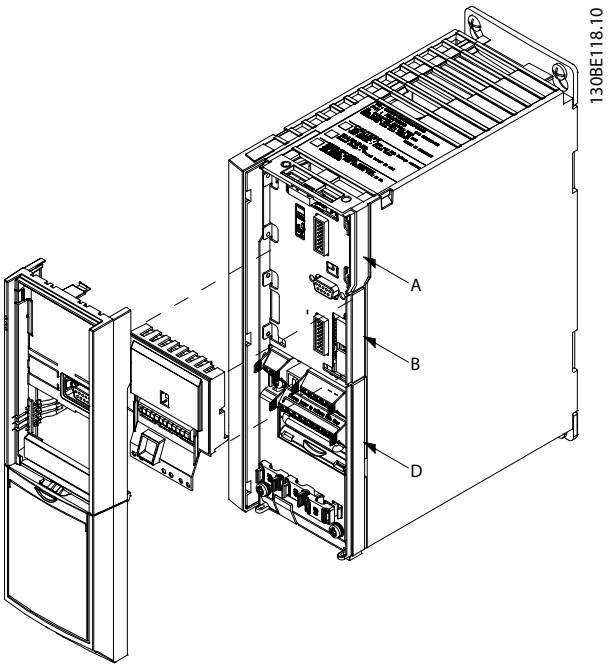

Illustration 3.3 LCP Frame and Terminal Cover Removal

1. Disconnect power to the frequency converter.
2. Remove the LCP, the terminal cover, and the LCP frame from the frequency converter.
3. Fit the MCB 112 in slot B, see *Illustration 3.3*.

Wiring

1. Remove the jumper wire between control terminals 37 and 12 or 13.
   - Cutting or breaking the jumper is not sufficient to avoid short circuiting.

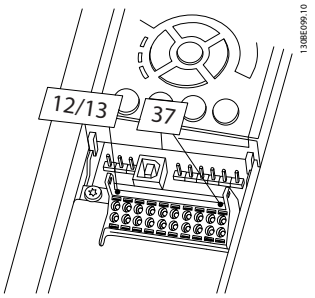

2. Connect X44/12 on the option card to terminal 37 on the frequency converter.

 Danfoss A/S © 01/2015 All rights reserved.

3. Connect terminal X44/10 to a digital input of the frequency converter. For reference when programming, note the number of selected digital input.

Assembly

1. Remove the knock-out in the extended LCP frame, so that the option fits under the extended LCP frame.
2. Fit the extended LCP frame and terminal cover.
3. Fit the LCP or blind cover in the extended LCP frame.
4. To indicate that the ATEX module is integrated, apply the delivered sticker to the front of the frequency converter, see *Illustration 1.1*.
5. Connect power to the frequency converter.
6. Perform risk assessment and a commissioning test according to EN ISO 12100.

 Danfoss A/S © 01/2015 All rights reserved.

4 Commissioning

Refer to the *chapter Commissioning* in the *VLT® Frequency Converters Safe Torque Off Operating Instructions*.

4.1 Operation and Maintenance

The safety function must be tested within regular intervals. Test once per year, or within the maintenance cycle of the plant. For recurring examinations of electrical systems in hazardous areas, the inspection period must be kept within 3 years.

The safety test recognises 1 fault (1oo1 - 1 out of 1). One fault between safety tests can cause loss of protection.

Commissioning test
Test the correct function of the MCB 112 by simulation of the sensor resistance at terminals T1 and T2. This test must also be done at maintenance services.

- Short-circuit test: Resistance 20 Ω in parallel to sensor terminals T1, T2.
- Line interruption test: Disconnect sensor line at terminal T1 or T2.
- Temperature test: Increase resistance 50–1500 Ω to 4000 Ω.

The tripping function is stated in the LCP and can be reset manually when the failure is removed. Pay attention to the ambient conditions in *chapter 7 Technical Specifications*.

4.1.1 Monitoring Sensor Resistance

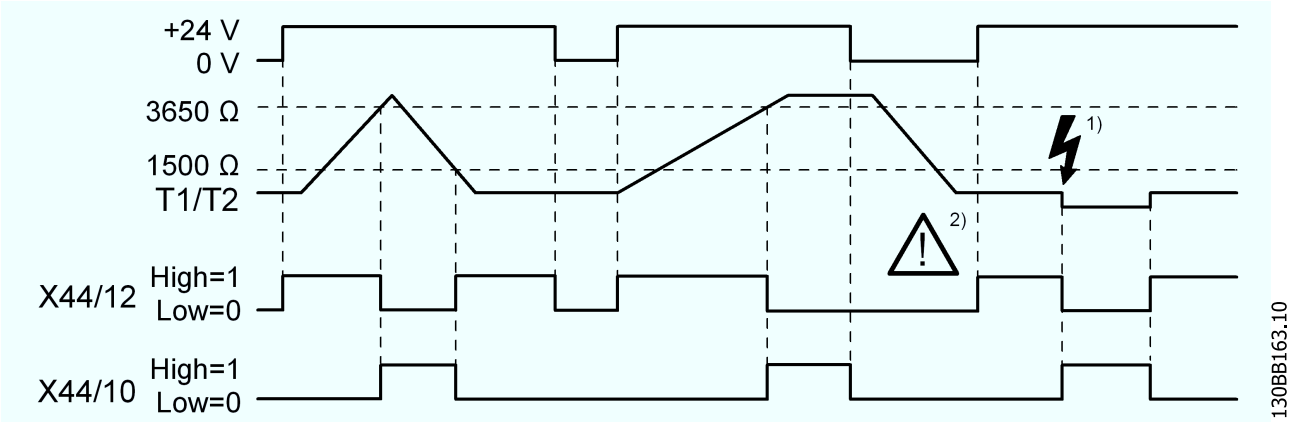

1)	Short circuit
2)	Tripping is not saved, and is not protected against 0 voltage

Illustration 4.1 Monitoring of Sensor Resistance

A current continuously monitors the resistance of the sensors. In cold state, the resistance is <250 Ω per sensor (sensor circuit <1.5 kΩ). The output to terminal X44/12 is high=1. The resistance of the sensor rises rapidly at nominal response temperature TNF. At a resistance of 3–4 kΩ, output to terminal X44/12 changes to low=0. The devices also switch off if the sensor or wire short-circuits (<20 Ω), or if the sensor or wire is interrupted. It switches back on automatically when the temperature has decreased by approximately 5 °C.

Depending on the number of sensors, the following tripping and release temperatures are achieved with respect to TNF (nominal response temperature of the sensors):

	Trip temperature	Release temperature
3 sensors in series	TNF+5 K	TNF-5 K
6 sensors in series	TNF	TNF-20 K

Table 4.1 Tripping and Release Temperatures

 Danfoss A/S © 01/2015 All rights reserved.

4.1.2 Thermal Limitation Curve

WARNING

EXPLOSION DANGER

Always use the thermal limitation curve in combination with Ex-e and Ex-n motors. See *Illustration 4.2*.

The output current/motor speed is permanently monitored and limited depending on the characteristic given by the motor manufacturer on the motor nameplate and data sheets.

1. Programme the characteristic values as frequency/current pairs in parameters *1-98 ATEX ETR interpol. points freq.* and *1-99 ATEX ETR interpol points current*.

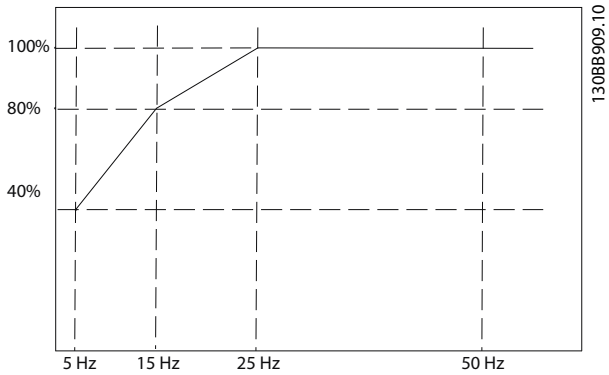

Illustration 4.2 Example of ATEX ETR Thermal Limitation Curve

1-98 ATEX ETR interpol. points freq.	*1-99 ATEX ETR interpol points current*
[0]=5 Hz	[0]=40%
[1]=15 Hz	[1]=80%
[2]=25 Hz	[2]=100%
[3]=50 Hz	[3]=100%

Table 4.2 Ratio between Motor Speed and Motor Current

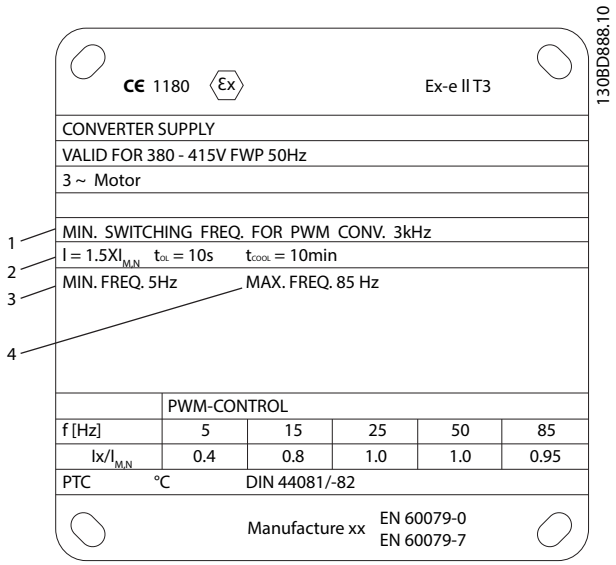

1	Minimum switching frequency
2	Maximum current
3	Minimum motor frequency
4	Maximum motor frequency

Illustration 4.3 Motor Nameplate Showing Frequency Converter Requirements

2. Use the 4 current points [A] from the motor nameplate.
3. Calculate the values as a percentage of nominal motor current and enter it into the array.

$$\left(\frac{I_x \times 100}{I_{m,n}}(\%)\right)$$

4. Programme all frequency/current limit points from the motor nameplate or motor data sheet.
5. Enter frequency settings for *1-98 ATEX ETR interpol. points freq.* in Hz, not RPM.

4.2 Parameter Set-up

4.2.1 Alarm Handling

The digital input is configured in parameter group *5-1* Digital Inputs*.

Digital input function	Select	Terminal
No operation	[0]	All *terminals 32, 33
Reset	[1]	All
...		
PTC Card 1	[80]	All
...		

Table 4.3 5-1* Digital Inputs

 Danfoss A/S © 01/2015 All rights reserved.

All digital inputs can be set to *[80] PTC Card 1*. However, only 1 digital input can have this selection.

NOTICE

Ensure that the digital input set to *[80] PTC Card 1* is not also connected as a thermistor resource (motor overload protection) in *1-93 Thermistor Resource*.

4

For further description, refer to the relevant frequency converter programming guide.

4.2.2 Parameter Settings

Ex-e and Ex-n-specific parameters	
Function	**Setting**
1-90 Motor Thermal Protection	[20] ATEX ETR
1-94 ATEX ETR cur.lim. speed reduction	20%
1-98 ATEX ETR interpol. points freq.	Motor nameplate
1-99 ATEX ETR interpol points current	
1-23 Motor Frequency	Enter the same value as for *4-19 Max Output Frequency*.
4-19 Max Output Frequency	Motor nameplate, possibly reduced for long motor cables, sine-wave filter, or reduced supply voltage.
4-18 Current Limit	Forced to 150% by 1-90 [20]
5-15 Terminal 33 Digital Input	[80] PTC Card 1
Parameter 5-19 Terminal 37 Safe Stop	[4] PTC 1 Alarm
14-01 Switching Frequency	Check that the default value fulfils the requirement from the motor nameplate. If not, use a sine-wave filter.
14-26 Trip Delay at Inverter Fault	0

Table 4.4 Parameter Settings

4.3 Parameter Set-up for Ex-e and Ex-n Motors

4.3.1 Maximum Current

To activate the ATEX ETR monitor function, set *1-90 Motor Thermal Protection* to *[20] ATEX ETR*. This enables *1-94 ATEX ETR cur.lim. speed reduction*, *1-98 ATEX ETR interpol. points freq.*, and *1-99 ATEX ETR interpol points current*, and limits *4-18 Current Limit* to 150%.

4.3.2 Maximum Current Limit

The operation above the thermal characteristic curve is permitted for a limited period of 60 s.

The actual thermal overload is calculated based on the ETR function selected in *1-90 Motor Thermal Protection* and is displayed in *16-18 Motor Thermal*.

Running above the characteristic curve for more than 50 s triggers *Warning 163 ATEX ETR cur.lim. warning*. Configure the reaction for operating in Ex-e and Ex-n current limits in *1-94 ATEX ETR cur.lim. speed reduction*.

- 0%: The frequency converter does not change anything besides issuing *Warning 163 ATEX ETR cur.lim.warning*.
- >0%: The frequency converter issues *Warning 163 ATEX ETR cur.lim.warning* and reduces motor speed following ramp 2 (parameter group *3–5* Ramp 2*).

Example:

Actual reference = 200 RPM

1-94 ATEX ETR cur.lim. speed reduction = 20%

Resulting reference = 160 RPM

Operating above the characteristic curve for more than 60 s within a period of 600 s triggers *Alarm 164 ATEX ETR cur.lim.*, and the frequency converter trips.

Operation above 150% nominal motor current trips the frequency converter after 1 s with *Alarm 164 ATEX ETR cur.lim.*

Operation above 180% nominal motor current immediately trips the frequency converter with *Alarm 164 ATEX ETR cur.lim.*

After first start-up (power-up), the overload counter starts at a value that prevents resetting the thermal load value by power cycling. After start-up, the overload warning is suppressed until the motor current exceeds the rated current limit for the first time.

4.3.3 Minimum Motor Frequency

The operation below the minimum frequency in *1-98 ATEX ETR interpol. points freq.* is allowed for a limited time only.

Running below the minimum frequency for more than 50 s triggers *Warning 165 ATEX ETR freq.lim.warning*.

 Danfoss A/S © 01/2015 All rights reserved.

Operation below the minimum frequency for more than 60 s within a period of 600 s triggers *Alarm 166 ATEX ETR freq.lim.alarm*. The frequency converter trips.

4.3.4 Maximum Motor Frequency

Do not exceed the maximum allowable output frequency. The motor data sheet or nameplate shows the maximum permissible value.

NOTICE

This value can be reduced for long motor cables, sine-wave filter, or reduced supply voltage.

$$f_{max} = \frac{U_n - U_{loss}}{U_n} x\ f_n$$

Example:

Nominal voltage = 480 V

Nominal frequency = 50 Hz

Voltage loss due to supply voltage of 450 V = 30 V

Resulting maximum frequency = 47 Hz

Use the result from the equation as the value set in *4-19 Max Output Frequency*.

4.3.5 Minimum Switching Frequency

Thermal motor losses increase with lower switching frequencies. Ensure that the frequency converter switching frequency does not drop below the value stated by the motor manufacturer.

NOTICE

It is mandatory to compare the minimum switching frequency requirement of the motor to the minimum switching frequency of the frequency converter, which is the default value in *14-01 Switching Frequency*. If the frequency converter does not meet this requirement, use a sine-wave filter.

4.3.6 Disable Protection Mode

In *protection mode*, the frequency converter derates the switching frequency below the default in *14-01 Switching Frequency*. For example, if the default value is 3 kHz, it can derate down to 2.5 kHz, depending on EEPROM. Therefore, disable *protection mode* in *14-26 Trip Delay at Inverter Fault*.

More information about derating can be found in the *section Derating* in the frequency converter design guide.

4.3.7 Safe Torque Off Functionality

The desired Safe Torque Off functionality is specified in *parameter 5-19 Terminal 37 Safe Stop*. When a VLT® PTC Thermistor Card MCB 112 is mounted, select 1 of the PTC options to get the full benefit from the alarm handling. Options *[4] PTC 1 Alarm* and *[5] PTC 1 Warning* are relevant when the MCB 112 is the only interrupt device using STO. Options *[6] PTC 1 & Relay A* to *[9] PTC 1 & Relay W/A* are relevant when other safety sensors are also connected to STO.

- Alarm: The frequency converter coasts. Reset the alarm manually (via bus, digital I/O, or by pressing [Reset]). Auto reset does not apply here. For more details, see *[4] PTC 1 Alarm* in *parameter 5-19 Terminal 37 Safe Stop*.
- Warning: The frequency converter coasts, but resumes operation when STO and the DI from X44/10 are disabled. For more details, see *[5] PTC 1 Warning* in *parameter 5-19 Terminal 37 Safe Stop*.

Configuring a digital input in parameter group *5-1* Digital Inputs* makes it possible to give a warning/alarm that specifies what triggered the Safe Torque Off.

NOTICE

When selecting warning instead of alarm, automatic restart is enabled. See *Installation in Combination with VLT® PTC Thermistor Card MCB 112* in the *VLT® Frequency Converters - Safe Torque Off Operating Instructions*.

Safe Torque Off-related Parameter

5-19 Terminal 37 Safe Stop		
To configure the Safe Torque Off functionality, set this parameter. A warning message makes the frequency converter coast the motor and enables the automatic restart. An alarm message makes the frequency converter coast the motor and requires a manual restart (via a fieldbus, digital I/O, or by pressing [Reset] on the LCP). When the MCB 112 is mounted, configure the PTC options to get the full benefit from the alarm handling.		
Option:		**Function:**
[1]	Safe Stop Alarm	Coasts the frequency converter when Safe Torque Off is activated. Manual reset from LCP, digital input, or fieldbus.
[3]	Safe Stop Warning	Coasts the frequency converter when Safe Torque Off is activated (terminal 37 off). When Safe Torque Off circuit is re-established, the frequency converter continues without manual reset.

 Danfoss A/S © 01/2015 All rights reserved.

4

5-19 Terminal 37 Safe Stop

To configure the Safe Torque Off functionality, set this parameter. A warning message makes the frequency converter coast the motor and enables the automatic restart. An alarm message makes the frequency converter coast the motor and requires a manual restart (via a fieldbus, digital I/O, or by pressing [Reset] on the LCP). When the MCB 112 is mounted, configure the PTC options to get the full benefit from the alarm handling.

Option:		Function:
[4]	PTC 1 Alarm	Coasts the frequency converter when Safe Torque Off is activated. Manual reset from LCP, digital input, or fieldbus.
[5]	PTC 1 Warning	Coasts the frequency converter when Safe Torque Off is activated (terminal 37 off). When Safe Torque Off circuit is re-established, the frequency converter continues without manual reset, unless a digital input set to *[80] PTC Card 1* is still enabled.
[6]	PTC 1 & Relay A	This option is used when the PTC option gates with a stop button through a safety relay to terminal 37. Coasts the frequency converter when Safe Torque Off is activated. Manual reset from LCP, digital input, or fieldbus.
[7]	PTC 1 & Relay W	This option is used when the PTC option gates with a stop button through a safety relay to terminal 37. Coasts the frequency converter when Safe Torque Off is activated (terminal 37 off). When Safe Torque Off circuit is re-established, the frequency converter continues without manual reset, unless a digital input set to *[80] PTC Card 1* is still enabled.
[8]	PTC 1 & Relay A/W	This option makes it possible to use a combination of alarm and warning.
[9]	PTC 1 & Relay W/A	This option makes it possible to use a combination of alarm and warning.

NOTICE

Selecting *Auto Reset/Warning* enables automatic restart of the frequency converter.

Function	Number	PTC	Relay
No Function	[0]	–	–
Safe Stop Alarm	[1]*	–	Safe Stop [A68]
Safe Stop Warning	[3]	–	Safe Stop [W68]
PTC 1 Alarm	[4]	PTC 1 Safe Stop [A71]	–
PTC 1 Warning	[5]	PTC 1 Safe Stop [W71]	–
PTC 1 & Relay A	[6]	PTC 1 Safe Stop [A71]	Safe Stop [A68]
PTC 1 & Relay W	[7]	PTC 1 Safe Stop [W71]	Safe Stop [W68]
PTC 1 & Relay A/W	[8]	PTC 1 Safe Stop [A71]	Safe Stop [W68]
PTC 1 & Relay W/A	[9]	PTC 1 Safe Stop [W71]	Safe Stop [A68]

Table 4.5 Overview of Functions, Alarms, and Warnings

W means warning and A means alarm. For further information, see Alarms and Warnings in the Troubleshooting section in the design guide or the operating instructions.

A dangerous failure related to Safe Torque Off issues *Alarm 72 Dangerous Failure*.

Refer to *Table 6.1*.

 Danfoss A/S © 01/2015 All rights reserved.

5 Application Examples

The following 2 examples show the possibilities when using the VLT® PTC Thermistor Card MCB 112.

Example 1: Standard use

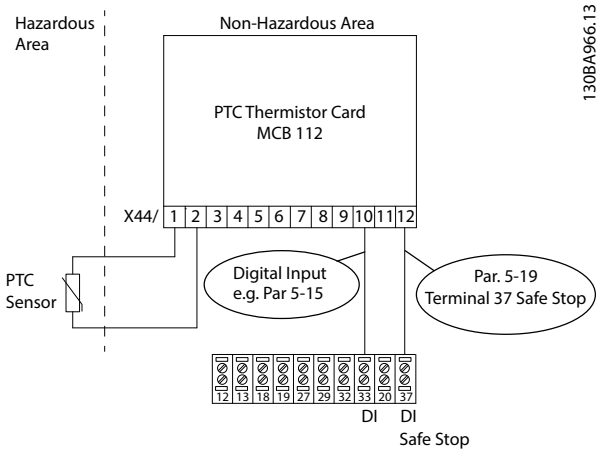

Illustration 5.1 Standard Use of MCB 112

Parameter 5-19 Terminal 37 Safe Stop		
[4]	PTC 1 Alarm	If the motor temperature is too high, or if a PTC failure occurs, the MCB 112 activates the STO. Terminal 37 goes LOW (active), and digital input 33 goes HIGH (active). This parameter decides the consequence of the Safe Torque Off (STO). With this selection, the frequency converter coasts and the LCP displays *Alarm 71 PTC 1 Safe Stop*. Reset the frequency converter manually from the LCP, digital input, or fieldbus when the conditions of the PTC are acceptable again (temperature of motor has dropped).
5-15 Terminal 33 Digital Input		
[80]	PTC Card 1	Connects the digital input of terminal 33 in the FC 302 to the MCB 112, which enables MCB 112 to indicate when STO has been activated from here.

Table 5.1 Programming Example 1

Alternatively, *parameter 5-19 Terminal 37 Safe Stop* could be set to *[5] PTC 1 Warning*, which means an automatic restart when the conditions of the PTC circuit have returned to acceptable. The selection depends on customer demands.

Example 2: Combination with other components using STO

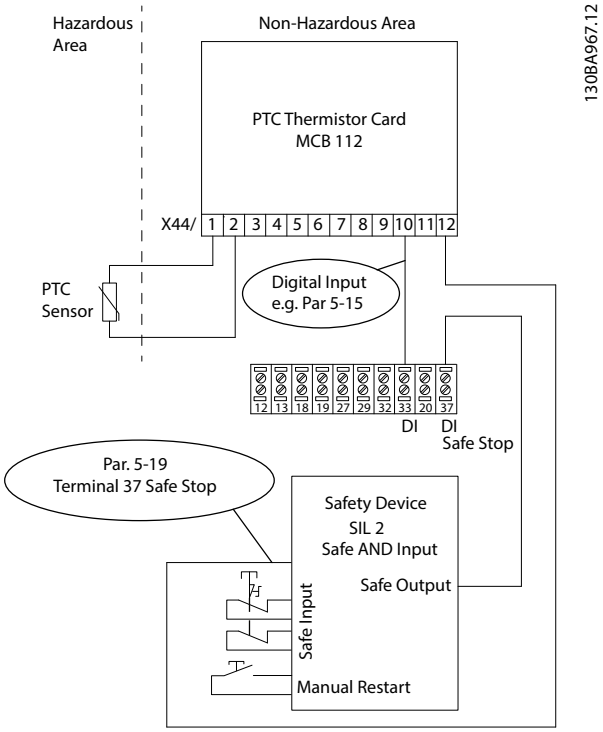

Illustration 5.2 More Safety Devices in Combination with STO and MCB 112

 Danfoss A/S © 01/2015 All rights reserved.

Parameter 5-19 Terminal 37 Safe Stop		
[6]	PTC 1 & Relay Alarm	If the motor temperature is too high, or if a PTC failure occurs, the MCB 112 activates the STO of the frequency converter. Terminal 37 goes LOW (active), and digital input 33 goes HIGH (active). This parameter decides the consequence of the Safe Torque Off (STO). With this selection, the frequency converter coasts and the LCP displays *Alarm 71 PTC 1 Safe Stop*. Reset the frequency converter manually from LCP, digital input, or fieldbus when the conditions of the PTC are acceptable again (the motor temperature has dropped). An emergency stop can also activate STO. Terminal 37 goes LOW (active), but MCB 112 X44/10 does not trigger digital input 33 as the MCB 112 did not need to activate the STO. Therefore, digital input 33 remains HIGH (inactive).
5-15 Terminal 33 Digital Input		
[80]	PTC Card 1	Connects the digital input of terminal 33 to the MCB 112, which enables the MCB 112 to indicate when STO has been activated from here.

Table 5.2 Programming Example 2

Alternatively, *parameter 5-19 Terminal 37 Safe Stop* could be set to *[7] PTC 1 & Relay Warning*. Selecting this option causes an automatic restart when the conditions of the PTC circuit and/or emergency stop circuit have returned to normal. The selection depends on customer demands. Also, the setting of *parameter 5-19 Terminal 37 Safe Stop* could be *[8] PTC 1 & Relay A/W* or *[9] PTC 1 & Relay W/A*, which is a combination of alarms and warnings. The selection depends on customer demands.

NOTICE

Selections *[4] PTC 1 Alarm* to *[9] PTC 1 & Relay W/A* in *parameter 5-19 Terminal 37 Safe Stop* are only visible if the MCB 112 is plugged into the B-option slot.

NOTICE

Take care that the digital input set to *[80] PTC Card 1* is not also configured as thermistor resource (motor overload protection) in *1-93 Thermistor Resource*.

 Danfoss A/S © 01/2015 All rights reserved.

6 Maintenance and Troubleshooting

6.1 Maintenance

The devices are maintenance-free. Only the manufacturer (www.ZIEHL.de) is allowed to perform repair work. Observe EN 60079-17 Explosive atmospheres - Part 17: Electrical installations, inspection, and maintenance.

6.2 Troubleshooting

- The resistance in the sensor circuit must have a value 50 Ω <R <1500 Ω. The terminal voltage must be <2.5 V with the resistors attached.
- If terminal T1-T2 is open, the relay must shut off. The terminal voltage must be approximately 9 V.

6.2.1 Alarm/Warning Code List

Number	Description	Warning	Alarm/ Trip	Alarm/ Trip lock	Parameter reference
68	Safe Stop Activated	X	X[1)]		*Parameter 5-19 Terminal 37 Safe Stop*
71	PTC 1 Safe Stop	X	X[1)]		*Parameter 5-19 Terminal 37 Safe Stop*
72	Dangerous Failure			X[1)]	*Parameter 5-19 Terminal 37 Safe Stop*

Table 6.1 Alarms and Warnings Directly Related to STO

1) Cannot be auto reset via 14-20 Reset Mode.

NOTICE

***Alarm 11, Motor Thermistor overtemp.* relates to *1-93 Thermistor Resource* and not to the MCB 112.**

6.2.2 Description of Alarm Word, Warning Word, and Extended Status Word

Bit	Hex	Dec	Alarm word	Alarm word2	Warning word	Warning word2
30	40000000	1073741824	Safe Stop [A68]	PTC 1 Safe Stop [A71]	Safe Stop [W68]	PTC 1 Safe Stop [W71]
31	80000000	2147483648		Dangerous Failure [A72]		

Alarm 68, Safe Stop
STO has been activated. To resume normal operation, apply 24 V DC to terminal 37, then send a reset signal (via bus, digital I/O, or by pressing [Reset]).

Warning 68, Safe Stop
STO has been activated. Normal operation is resumed when STO is disabled.
Warning: *Automatic Restart*.

Alarm 71, PTC 1 Safe Stop
STO has been activated from the MCB 112 (motor too warm). Normal operation can be resumed when:

- The MCB 112 applies 24 V DC to terminal 37 again (when the motor temperature reaches an acceptable level), and
- The digital input from the MCB 112 is deactivated.

When that happens, send a reset signal (via bus, digital I/O, or by pressing [Reset]).

Warning 71, PTC 1 Safe Stop
STO has been activated from the MCB 112 (motor too warm). Normal operation can be resumed when:

- The MCB 112 applies 24 V DC to terminal 37 again (when the motor temperature reaches an acceptable level), and
- The digital input from the MCB 112 is deactivated.

Warning: *Automatic Restart*.

Alarm 72, Dangerous Failure
STO with trip lock. If the combination of STO commands is unexpected, the dangerous failure-alarm is issued. This situation occurs if the MCB 112 enables X44/10 without STO being enabled. Furthermore, if the MCB 112 is the only device using STO (specified by *[4] PTC 1 Alarm* or *[5] PTC 1 Warning* in *parameter 5-19 Terminal 37 Safe Stop*), an unexpected combination activates the STO without activating the X44/10. *Table 6.2* summarises the unexpected combinations that trigger this alarm.

 Danfoss A/S © 01/2015 All rights reserved.

NOTICE

If X44/10 is activated in selection *[2] Safe Stop Alarm* or *[3] Safe Stop Warning*, this signal is ignored. However, the MCB 112 is still able to activate STO.

Example:
[5] PTC 1 Warning is selected in *parameter 5-19 Terminal 37 Safe Stop*, and X44/10 is not activated, but STO is. This is an unexpected selection. *[5] PTC 1 Warning* in *parameter 5-19 Terminal 37 Safe Stop* specifies that STO is only triggered from MCB 112.

+: Activated
-: Not activated

Function	Number	X44/10 (DI)	STO terminal 37
PTC 1 Alarm	[4]	+	-
		-	+
PTC 1 Warning	[5]	+	-
		-	+
PTC 1 & Relay A	[6]	+	-
PTC 1 & Relay W	[7]	+	-
PTC 1 & Relay A/W	[8]	+	-
PTC 1 & Relay W/A	[9]	+	-

Table 6.2 Unexpected Combinations Triggering Alarm 72 Dangerous Failure

NOTICE

For correct and safe use of the STO function, follow the related information and instructions in the *VLT® Frequency Converters - Safe Torque Off Operating Instructions*.

 Danfoss A/S © 01/2015 All rights reserved.

7 Technical Specifications

7.1 Mains Supply

Mains supply	
Rated supply voltage U_S	24 V DC
Tolerance voltage U_S	21–28 V DC
Power consumption	<1 W

7.2 Control Inputs and Outputs

PTC thermistor connection X44/1+X44/2	
Standard	DIN 44081/DIN 44082
Numbers	Set with 3–6 PTCs in series
Cut-out point	3.3 kΩ...3.65 kΩ...3.85 kΩ
Reclosing point	1.7 kΩ...1.8 kΩ...1.95 kΩ
Collective resistance cold sensors	≤1.65 kΩ
Terminal voltage (sensors)	≤2.5 V at R ≤3.65 kΩ, ≤9 V at R=∞
Terminal current (sensors)	≤1 mA
Short circuit	20 Ω ≤R ≤40 Ω
Power consumption	≤2 mW

Safe stop terminal 37, X44/12	
Output	PNP transistor
Logical voltage level	0–24 V DC
Voltage	Low=0, PNP <4 V DC High=1, PNP >20 V DC
Current	60 mA

Logic out, X44/10	
Output	PNP transistor
Logical voltage level	0–24 V DC
Voltage	Low=0, PNP <5 V DC High=1, PNP >10 V DC
Current	10 mA

7.3 Ambient Conditions

Environment	
Rated ambient temperature range, T_a	-20 °C to +55 °C
Relative humidity	5–95%, without condensation
EMC - Immunity industry standard	EN 61000-6-2
EMC - Emission industry standard	EN 61000-6-4
Vibration resistance	10–1000 Hz 1.14 g
Shock resistance	50 g

Testing conditions	
Standards	EN 60947-8, EN 50178
Rated impulse voltage	6000 V
Overvoltage category	III
Contamination level	2
Rated insulation voltage U_I	690 V
Safe separation up to U_I	500 V

 Danfoss A/S © 01/2015 All rights reserved.

7.4 Other Specifications

Enclosure	
Form 130B4065	PA 6
Dimensions (H x W x T) [mm]	82.5 x 69.5 x 29.5
Wire connection, solid wire	1 x 0.5–1.5 mm^2 (AWG 20–16 solid wire)
Insulation strip length	8.5–9.5 mm
Protection rating IEC 60529	IP20
Weight	≈50 g

7.5 Safety Characteristics of the Built-in MCB 112

The safety characteristics include the connection between output safe stop T37 (output X44/12 on MCB 112) and terminal 37 input on the control card.

Operating mode	Hardware architecture	Fault tolerance HFT	Safety integrity level	Subsystem
Low demand mode	1oo1	0	SIL 2	Type A device

Table 7.1 Safety Integrity Level SIL (EN 61508)

MCB 112	MTBF	SFF	λ_{SD}	λ_{SU}	λ_{DD}	λ_{DU}
Ta=40 °C	44 years	96,5%	2103 x 10^{-9}/h	41.8 x 10^{-9}/h	1.23 x 10^{-9}/h	81.4 x 10^{-9}/h

Table 7.2 Safety-related Parameters, Part 1

MCB 112	Proof test interval	1 year	3 years	5 years	10 years
Ta=40 °C	PFD_{avg}	3.37E-04	1.01E-03	1.68E-03	3.37E-03

Table 7.3 Safety-related Parameters, Part 2

Observe the proof test interval according to EN 60079-17 for electrical equipment ≤3 years.

The data of the functional safety stated in *Table 7.1* to *Table 7.3* are valid for an ambient temperature of 40 °C. Data for more ambient temperatures can be obtained by request.

 Danfoss A/S © 01/2015 All rights reserved.

Index

A

Abbreviations ... 6
Alarm word ... 19
Ambient conditions ... 12, 21
Ambient temperature ... 22
Approvals ... 5
ATEX
- ETR monitor function ... 14
- Certification ... 4
- Module ... 4, 11
- Thermal monitoring function ... 4, 7
- Zone 1 ... 3, 5
- Zone 2 ... 3, 5
- Zone 21 ... 3, 5
- Zone 22 ... 3, 5

Auto reset ... 15

B

Block diagram ... 5

C

Cables/Wires
- Control cable, mounting ... 10
- Mounting control cable ... 10
- Permissible length ... 9
- Screened control wire ... 9
- Sensor circuit wire ... 9
- Separate control wire ... 9

Certifications ... 5
Combustible dust ... 8
Commissioning test ... 12
Conventions ... 6

D

Dangerous failure ... 16, 19, 20
Derating ... 15

E

Environment ... 21
Ex-e current limit ... 14
Ex-n current limit ... 14
Explosive dust atmosphere ... 3, 7
Explosive gas atmosphere ... 3, 7
Extended status word ... 19

F

Frequency converter
- Requirement ... 13

I

Intended use ... 3

M

Maintenance ... 19
Manual reset ... 15
Marking D ... 3
Marking G ... 3
Maximum current ... 5
Minimum frequency ... 14
Minimum switching frequency ... 5
Misuse of the product ... 4
Motor
- Ex-d ... 4
- Ex-e ... 4, 5, 13, 14
- Ex-n ... 4, 5, 13, 14
- Maximum frequency ... 5
- Minimum frequency ... 5
- Monitoring ... 4
- Nominal motor current ... 14
- Protection ... 4
- Requirement ... 5

Multi-motor application ... 5

N

Nameplate ... 5, 13

O

Overvoltage ... 10

P

Protection mode ... 15

Q

Qualified personnel ... 3, 7, 8

R

Release temperature ... 12
Repair work ... 19
Resistance ... 12

S

Safe separation ... 4
Safe Torque Off ... 4, 16
Safe Torque Off functionality ... 15
Safety function ... 12
Safety integrity level, SIL ... 22
Sensor resistance ... 12

 Danfoss A/S © 01/2015 All rights reserved.

Standards
ATEX Directive 94/9/EC.... 4
DIN 44081.... 3, 4, 21
DIN 44082.... 3, 4, 21
EN 50178.... 21
EN 60079-1.... 7
EN 60079-14.... 4, 7, 8
EN 60079-17.... 22
EN 60079-17 Explosive atmospheres.... 19
EN 60079-7.... 4
EN 60947-8.... 3, 21
EN 61000-6-2.... 21
EN 61000-6-4.... 21
EN 61508.... 22
EN ISO 12100.... 7, 11
IEC 60529.... 7, 8, 10
ISO 13849-2.... 7

Sticker.... 4

Symbols.... 6

T

Terminals
Safe stop T37.... 10
T1.... 12
T2.... 12
X44/1.... 21
X44/10.... 4, 11, 15, 19, 20, 21
X44/12.... 4, 10, 12, 21
X44/2.... 21

Test.... 12

Testing conditions.... 21

Thermal limitation curve.... 13

Thermal overload.... 14

Thermal winding protection.... 5

Tripping function.... 4, 12

Tripping temperature.... 12

U

Unexpected combination.... 20

V

Voltage drop.... 5

W

Warning word.... 19

 Danfoss A/S © 01/2015 All rights reserved.

 Danfoss A/S © 01/2015 All rights reserved.

Danfoss can accept no responsibility for possible errors in catalogues, brochures and other printed material. Danfoss reserves the right to alter its products without notice. This also applies to products already on order provided that such alterations can be made without subsequential changes being necessary in specifications already agreed. All trademarks in this material are property of the respective companies. Danfoss and the Danfoss logotype are trademarks of Danfoss A/S. All rights reserved.

Danfoss A/S
Ulsnaes 1
DK-6300 Graasten
vlt-drives.danfoss.com

130R0104 MG33V302 01/2015